该文档是极速PDF编辑器生成
如果想去掉该提示,请访问并下载:
http://www.jitupdfeditor.com/

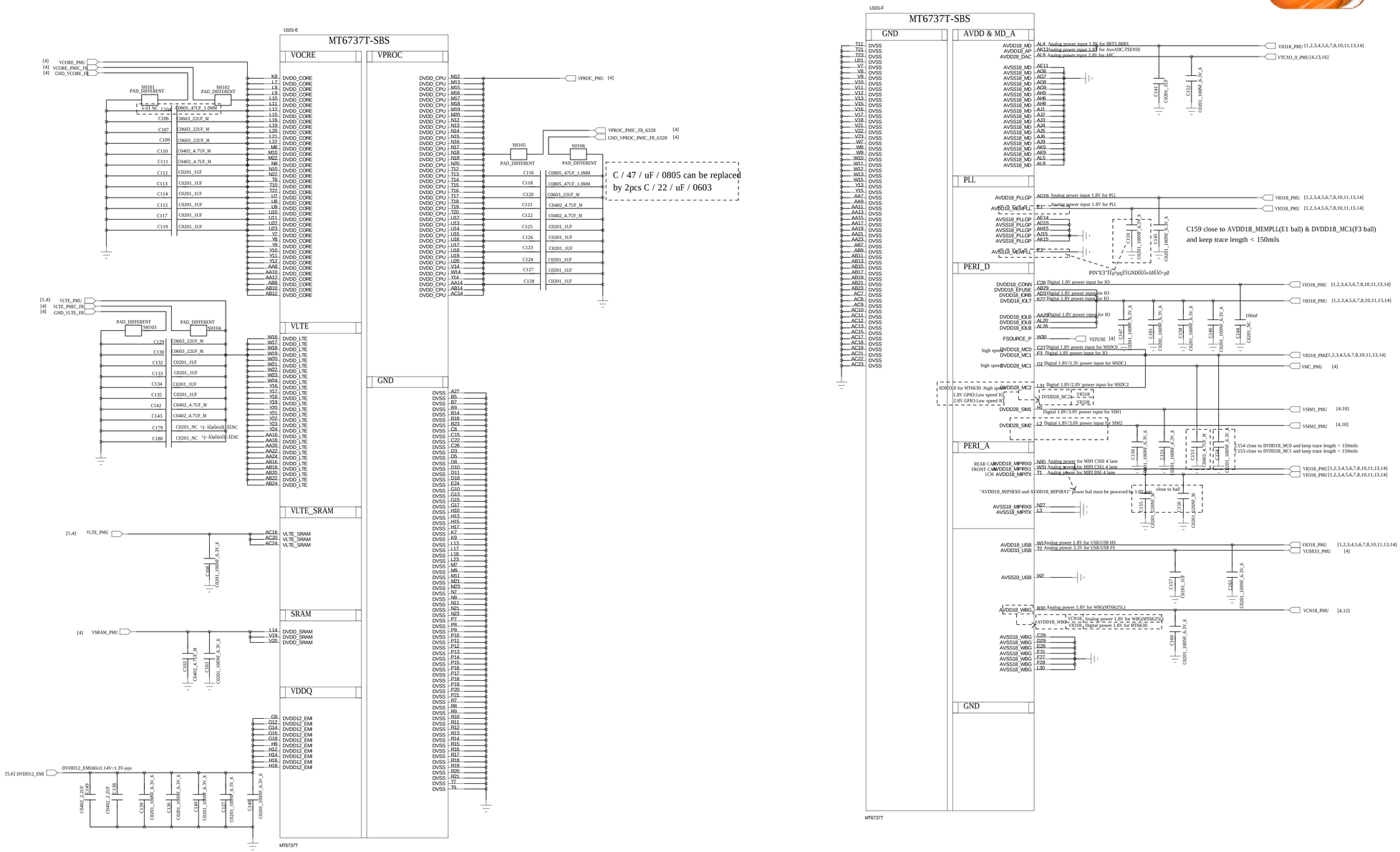

DRAWN: Longbaicheng	DATED:	COMPANY: TRANSSION	
CHECKED: <Checked By>	DATED: <Checked Date>	TITLE: INF-NOTE4S_MT6737T_Schematic	
QUALITY CONTROL: <QC By>	DATED: <QC Date>	CODE: <Code> / SIZE: D / DRAWING NO: <Drawing Number>	REV: V1.0
RELEASED: <Released By>	DATED: NA	SCALE: <Scale>	SHEET: 1 OF 17

该文档是极速PDF编辑器生成
如果想去掉该提示,请访问并下载:
http://www.jitupdfeditor.com/

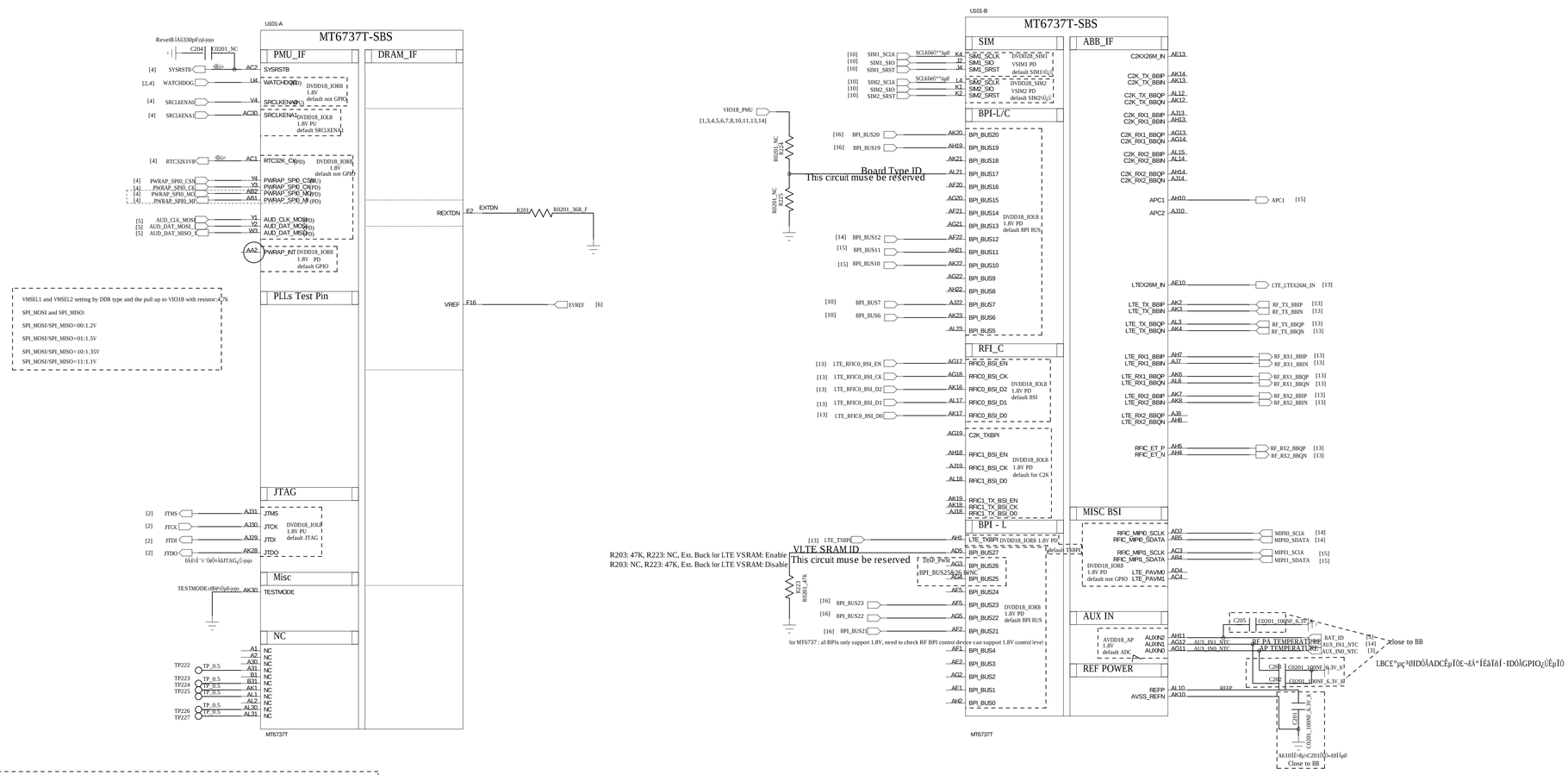

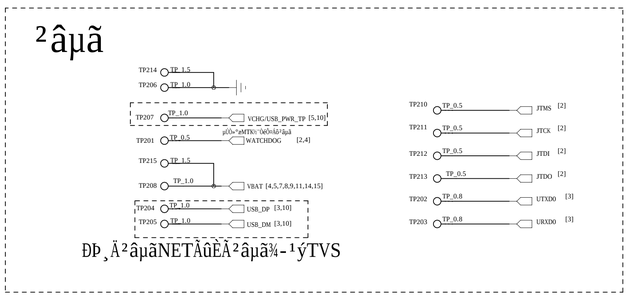

COMPANY:	TRANSSION		
TITLE:	INF-NOTE4S_MT6737T_Schematic		
DRAWN: Longbaicheng	DATED: 2019-01-13		
CHECKED: <Checked By>	DATED: <Checked Date>	CODE: <Code>	SIZE: D
QUALITY CONTROL: <QC By>	DATED: <QC Date>	DRAWING NO: <Drawing Number>	REV: V1.0
RELEASED: <Released By>	DATED: NA	SCALE: <Scale>	SHEET: 2 OF 17

该文档是极速PDF编辑器生成
如果想去掉该提示,请访问并下载:
http://www.jitupdfeditor.com/

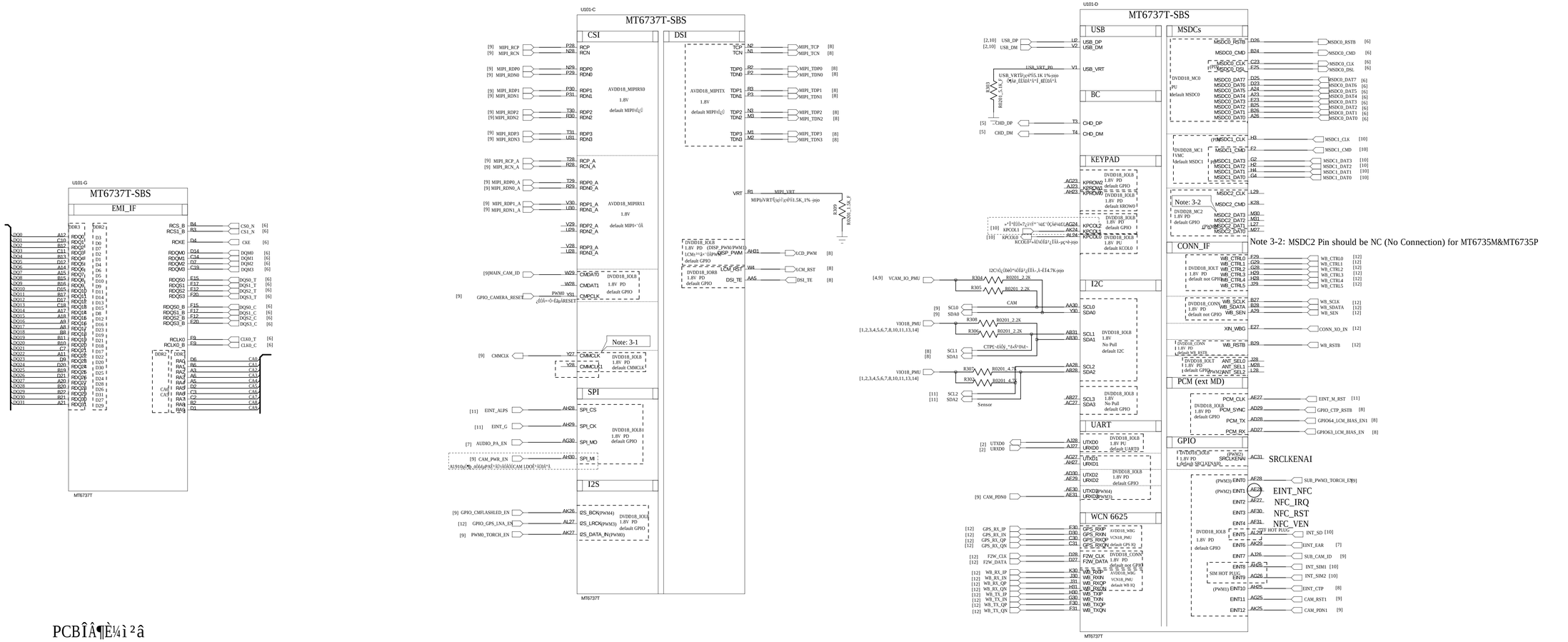

Note 3-2: MSDC2 Pin should be NC (No Connection) for MT6735M&MT6735P

PCBÎÂ¶È¼ì²â

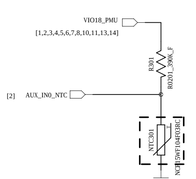

NTC¼àAP 5-8mmÉ~Í~È±±Ú¿*ÈâÉÚ·¢ÊÈÉ±¼ù£¨PMIC,Charger,WIFIµÊÚ15mmÖÔÊÎ

SET	Controller	Ref.Design	Note
I2C0	AP	Rear Camera w AF Front Camera w/o AF	1.Open drain Type 2.PU to Camera's power supply
I2C1	AP	CTP/SW Charger LCM gate driver	1.Open drain Type
I2C2	AP	MEMS sensor/NFC Flashlight Driver MHL/Front Camera w AF	1.Open drain Type
I2C3	AP	reserved for future use	1.Open drain Type

Set	Function	Power Domain	Note
MSDC0	eMMC	DVDD18_MC0	1.Dedicated pin for eMMC 2.Independent power domain
MSDC1	T-Card	DVDD28_MC1	1.Dedicated pin for T-Card 2.Independent power domain
MSDC2	MT6630	DVDD28_MC2	1.1.8V for SDIO3.0

COMPANY: TRANSSION			
TITLE: INF-NOTE4S_MT6737T_Schematic			
DRAWN: Longbaicheng	DATED: 2019-01-13		
CHECKED: <Checked By>	DATED: <Checked Date>	CODE: <Code>	SIZE: D
QUALITY CONTROL: <QC By>	DATED: <QC Date>	DRAWING NO: <Drawing Number>	REV: V1.0
RELEASED: <Released By>	DATED: NA	SCALE: <Scale>	SHEET: 3 OF 17

该文档是极速PDF编辑器生成
如果想去掉该提示,请访问并下载:
http://www.jisupdfeditor.com/

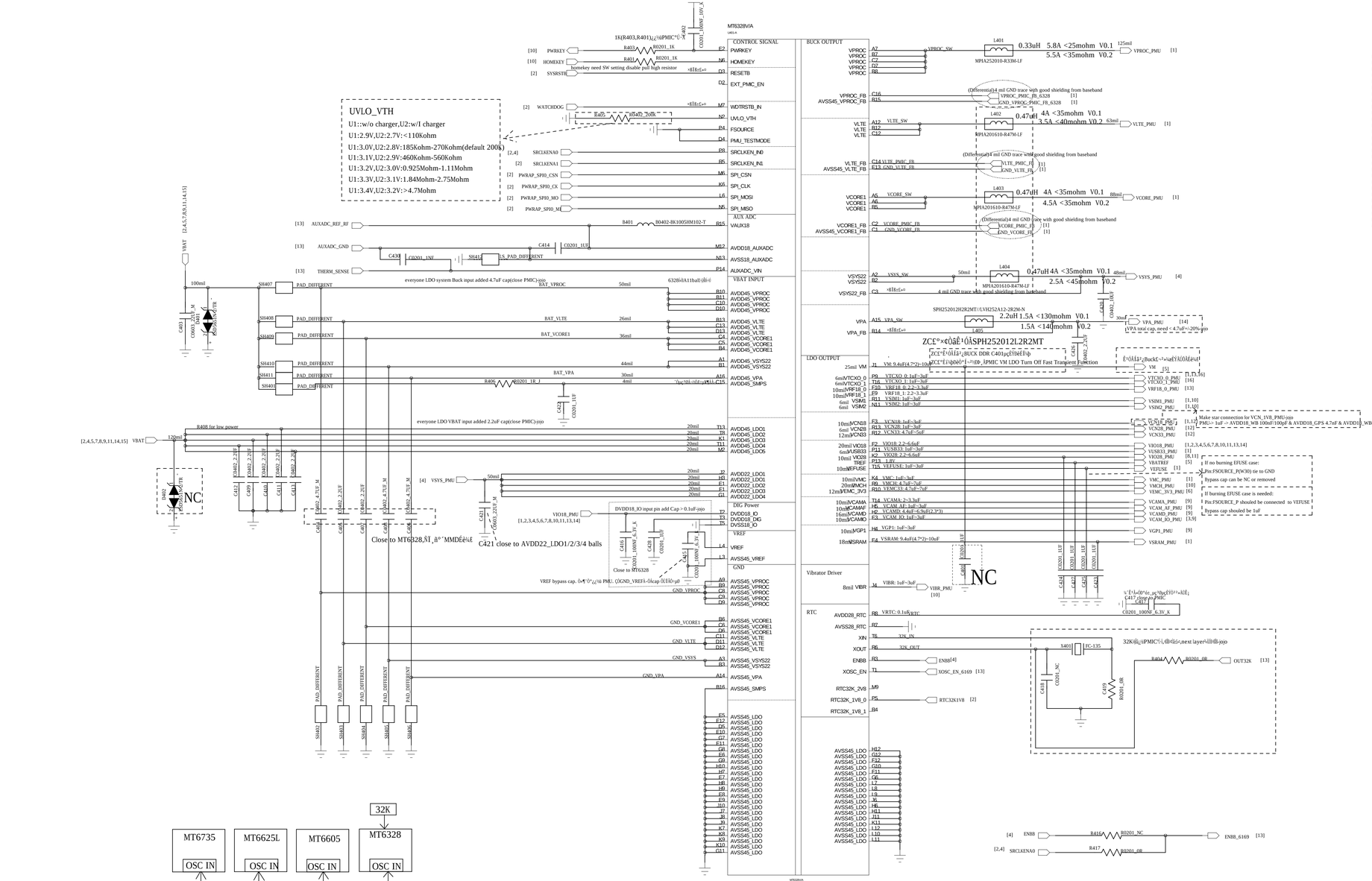

MT6735 Core Powers	PMIC Power source	Buck/LDO	Min. Voltage	Max. Voltage
VPROC(DVDD_CPU)	MT6328's VPROC	Buck	0.85	1.265
VCORE(DVDD_CORE)	MT6328's VCORE	Buck	0.85	1.265
VLTE(DVDD_LTE)	MT6328's VLTE	Buck	0.85	1.155
VM(DVDD_EMI)	MT6328's VM	LDO	1.14	1.300
VSRAM(DVDD_SRAM)	MT6328's VSRAM	LDO	0.85	1.310
LTE_VSRAM_EXT(VLTE_SRAM)	External Buck:LTE_VSRAM_EXT	Buck	0.85	1.150

BUCK	Output Voltage(V)	Output Current(mA)	Supply
VPROC	1.15V[0.6V-1.31V]6.25mV	5000	CPU Processor
VCORE	1.15V[0.6V-1.31V]6.25mV	3500	GPU+Soc
VLTE	1.05V[0.6V-1.31V]6.25mV	2800	LTE Core
VSYS	2V	1900	System Power
VPA	3.4V(0.5V-3.4V)	600	MT6169 PA

LDO	Output Voltage(V)	Output Current(mA)	Supply
VTCXO0	2.8	40	MT6169 TCXO
VTCXO1	2.8	40	MT6158 TCXO
VCN33	3.3	350	MT6625L 3.3V
VCN28	2.8	40	MT6625L 2.8V
VAUX18	1.8V	40	AUXADC 1.8V
VAUD28	2.8(1.5/1.8/2.5/2.8)	40	Audio Power
VCAMA	2.8(1.2/1.3/1.5/1.8/2.0/2.8/3.0/3.3)	200	Camera Analog power
VMCH	2.9(2.9/3.0/3.3)	800	SD 3.0
VCAM_AF	2.8(1.2/1.3/1.5/1.8/2.0/2.8/3.0/3.3)	200	Camera AF power
VGP1	2.8(1.2/1.3/1.5/1.8/2.5/2.8/3.0/3.3)	200	CTP
VIO28	2.8	200	Sensor,IR LED
VIBR	2.8(1.2/1.3/1.5/1.8/2.0/2.8/3.0/3.3)	100	MOTO
VMC	2.9(1.8/2.9/3.0/3.3)	200	SD Card 3.0
VEFUSE	1.8(1.8/1.9/2.0/2.1/2.2)	200	Efuse
VEMC33	3.3(3.0/3.3)	400	EMMC 5.0 power
VUSB	3.3	20	USB 2.0
VSIM1	1.8(1.7/1.8/1.86/2.76/3.0/3.1)	50	SIM CARD 1
VSIM2	1.8(1.7/1.8/1.86/2.76/3.0/3.1)	50	SIM CARD 2
VRTC	2.8	2	RTC
DVDD18_DIG	1.8	20	
VCAMD	(0.9/1.0/1.1/1.22/1.3/1.5)	500	Camera Digital power

¼§Ìå·½°¸Ìù£¬ÅäÔÅ±í1/3 (Page4¡¢13¡¢16£©							
	MT6328 AuxADC			32K Crystal Component			
	C430	C414	B401	R404	C418	C419	X401
VCTXO+32K Exist	0R	1uF	0R	NC	22pF	22pF	32K
TSX+32K Exist	1nF	1uF	Bead	NC	22pF	22pF	32K
TSX+32K Less	1nF	1uF	Bead	0R	NC	0R	NC

DRAWN: Longbaicheng	DATED: 2019-01-13	COMPANY: TRANSSION	
CHECKED: <Checked By>	DATED: <Checked Date>	TITLE: INF-NOTE4S_MT6737T_Schematic	
QUALITY CONTROL: <QC By>	DATED: <QC Date>	CODE: <Code> / SIZE: D / DRAWING NO: <Drawing Number>	REV: V1.0
RELEASED: <Released By>	DATED: NA	SCALE: <Scale>	SHEET: 4 OF 17

该文档是极速PDF编辑器生成
如果想去掉该提示,请访问并下载:
http://www.jitupdfeditor.com/

REVISIONS				
LTR	ECO NO:		APPROVED:	DATE:

Audio

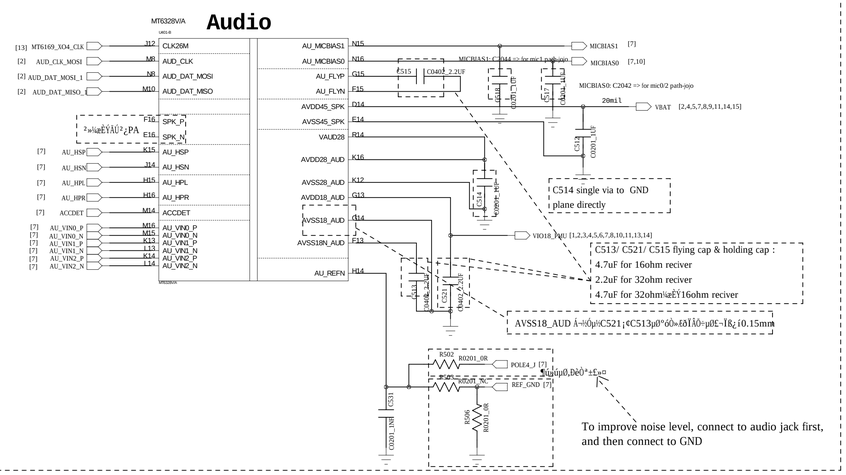

External Buck for DRAM

[Optional] for Low Power enhancement

NCP6324BMTAATBG Pin6 is Power Good function£¬tie to Pull low is no power good function

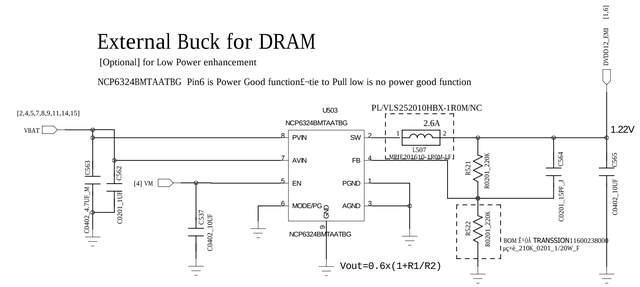

BAT CONNECTOR

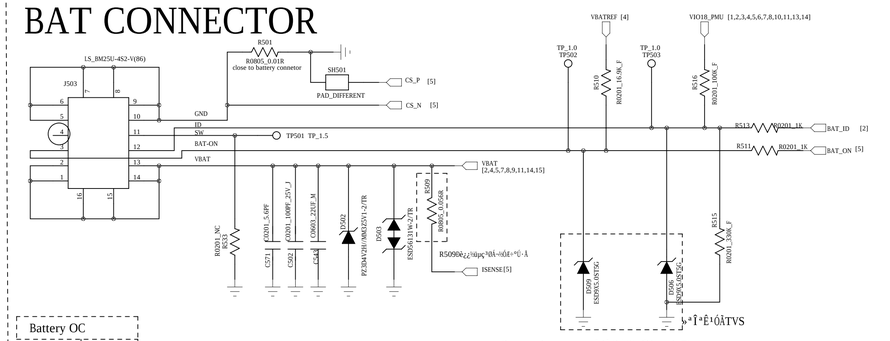

Battery is removed,if BAT_ON >1.7V

Selection1:NTC=10K_1%(3308K %3/1%); if battery NTC is 10kohm, R510=16.9K
Selection2:NTC=47K_1%(4050K %3/1%); if battery NTC is 47kohm, R510=61.9K
Selection3:None NTC; if NO NTC, R510=16.9K,BAT_ON 10K to GND

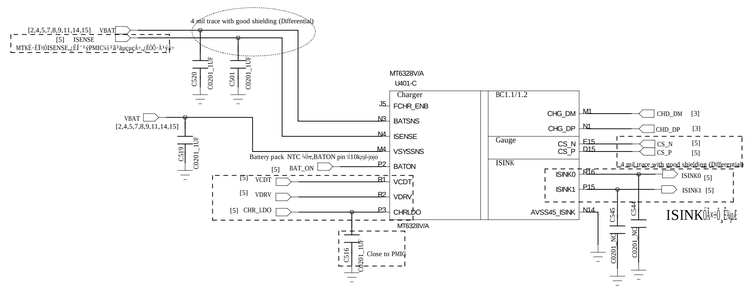

Charger

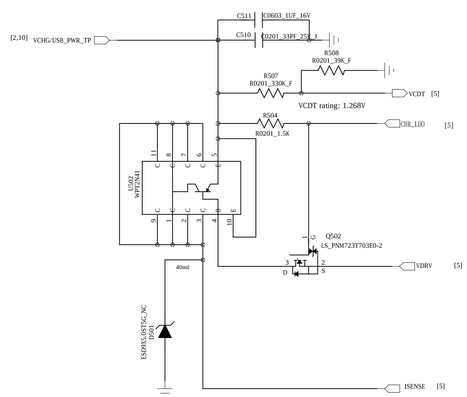

LED Indicator

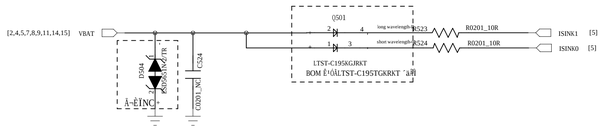

DRAWN: Longbaicheng	DATED: 2019-01-13	COMPANY: TRANSSION			
		TITLE: INF-NOTE4S_MT6737T_Schematic			
CHECKED: <Checked By>	DATED: <Checked Date>	CODE:	SIZE:	DRAWING NO:	REV:
QUALITY CONTROL: <QC By>	DATED: <QC Date>	<Code>	D	<Drawing Number>	V1.0
RELEASED: <Released By>	DATED: NA	SCALE: <Scale>		SHEET: 5 OF 17	

该文档是极速PDF编辑器生成
如果想去掉该提示,请访问并下载:
http://www.jitupdfeditor.com/

REVISIONS				
LTR	ECO NO:	APPROVED:	DATE:	

eMMC+LPDDR3

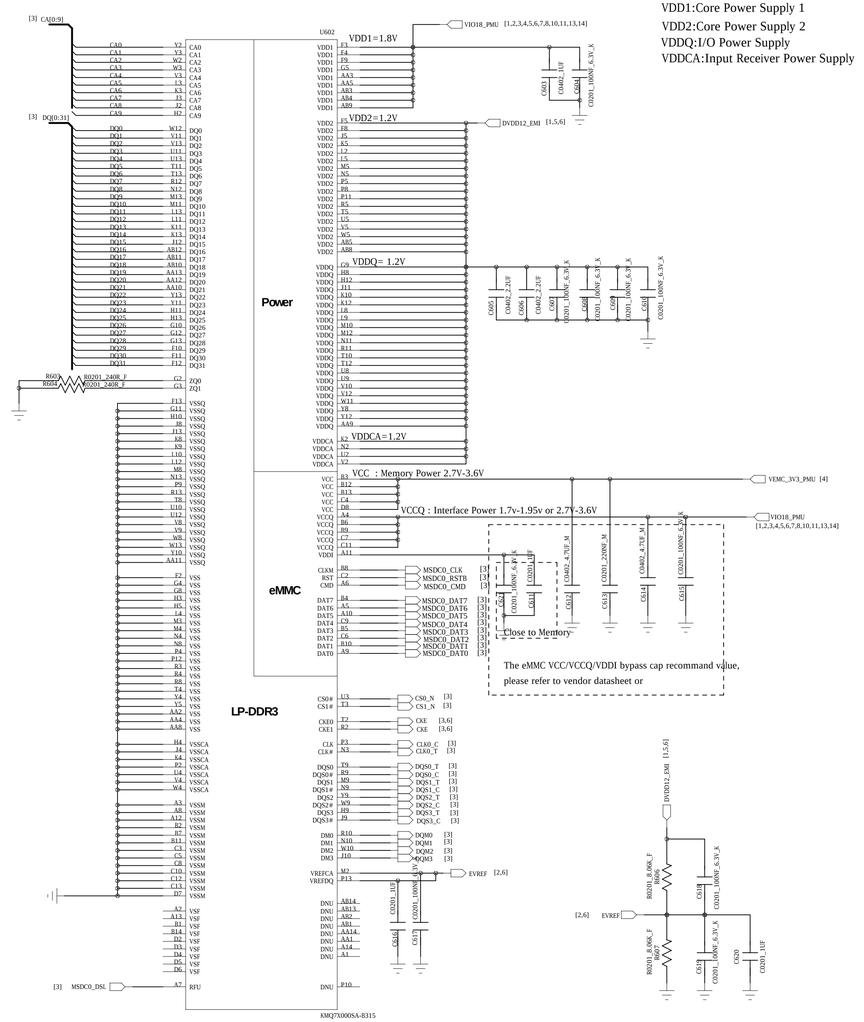

COMPANY: TRANSSION			
TITLE: INF-NOTE4S_MT6737T_Schematic			
DRAWN: Longbaicheng	DATED: 2019-01-13		
CHECKED: <Checked By>	DATED: <Checked Date>		
QUALITY CONTROL: <QC By>	DATED: <QC Date>		
RELEASED: <Released By>	DATED: NA		
CODE: <Code>	SIZE: D	DRAWING NO: <Drawing Number>	REV: V1.0
SCALE: <Scale>		SHEET: 6 OF 17	

该文档是极速PDF编辑器生成
如果想去掉该提示,请访问并下载:
http://www.jitupdfeditor.com/

REVISION HISTORY				
LTR	ECO NO:		APPROVED:	DATE:

RECEIVER

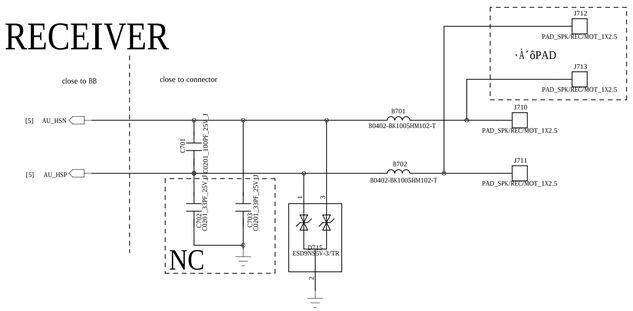

AUDIO PA

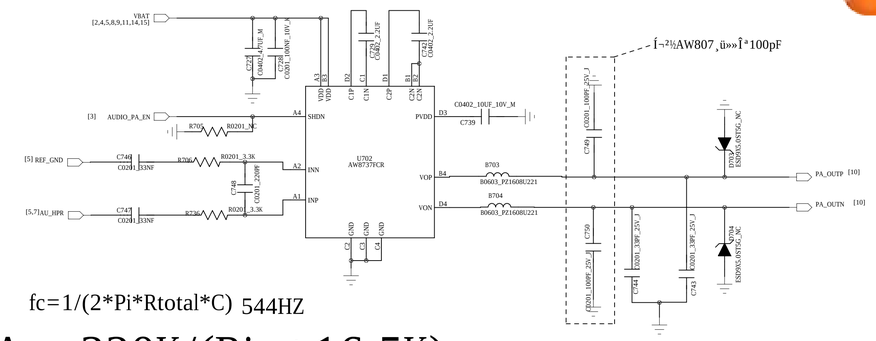

fc=1/(2*Pi*Rtotal*C) 544HZ

Av=320K/(Rin+16.5K)

MIC -- MAIN

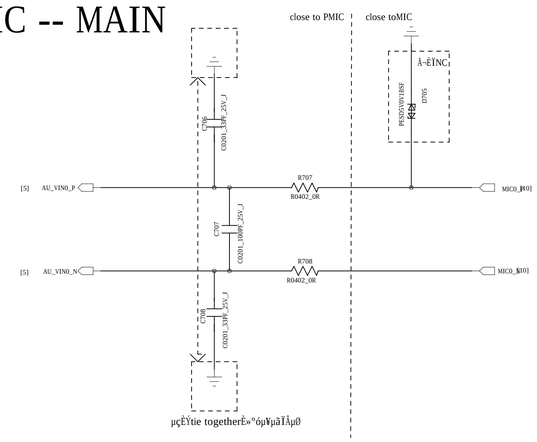

Earphone MICPHONE

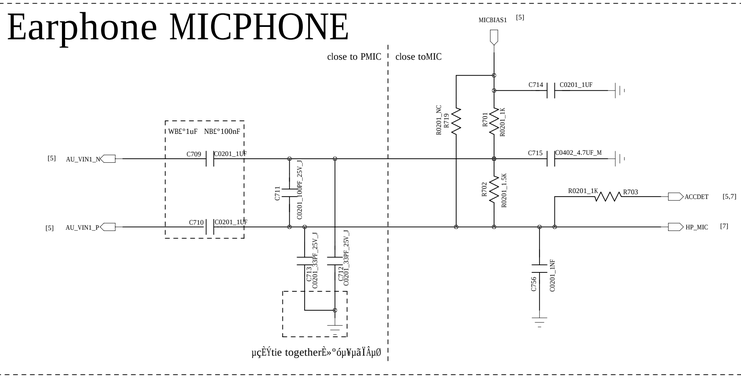

Mic mode setting									
Mode	C709	C710	R719	R701	R702	R703	C714	C715	匹配阻抗
ACC	WBE*1uF NBE*100nF	WBE*1uF NBE*100nF	NC	1K	1.5K	1K	1uF	4.7uF	Y
DCC	0R	0R	NC	NC	NC	NC	NC	0R	N
DCC	0R	0R	2.5K	NC	NC	NC	NC	0R	Y

MIC -- Sub

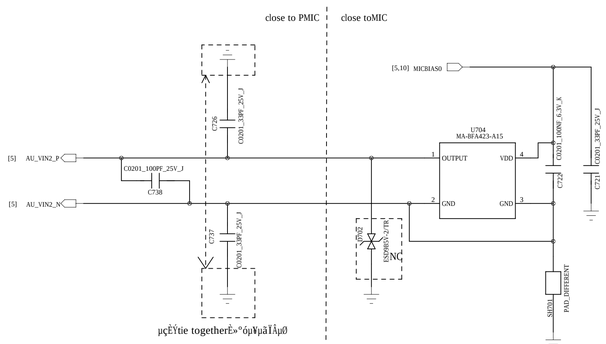

EAR_JACK

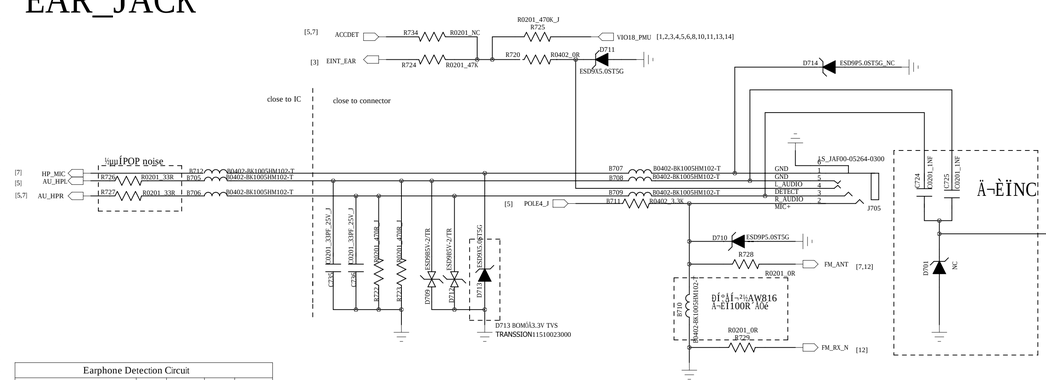

Earphone Detection Circuit				
Mode	R725	R724	R734	R720
Low Cost Mode	NC	NC	47K	NC
Traditonal Mode (ACC)	470K	47K	NC	0R

DRAWN: Longbaicheng	DATED: 2019-01-13	COMPANY: TRANSSION	
CHECKED: <Checked By>	DATED: <Checked Date>	TITLE: INF-NOTE4S_MT6737T_Schematic	
QUALITY CONTROL: <QC By>	DATED: <QC Date>	CODE: <Code> / SIZE: D / DRAWING NO: <Drawing Number>	REV: V1.0
RELEASED: <Released By>	DATED: NA	SCALE: <Scale>	SHEET: 7 OF 17

该文档是极速PDF编辑器生成
如果想去掉该提示,请访问并下载:
http://www.jitupdfeditor.com/

LCM ÐÂ¿ª

LCD AND CTP INTERFACE

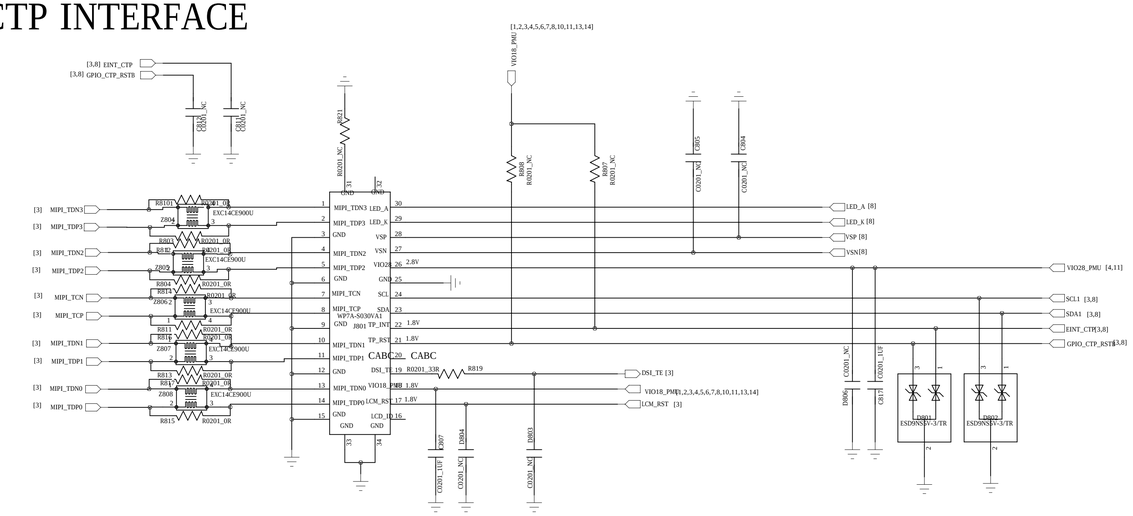

LCM Backlight LED Driver

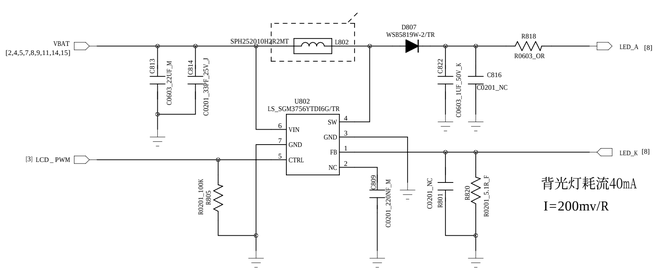

LCD +/-5V Driver

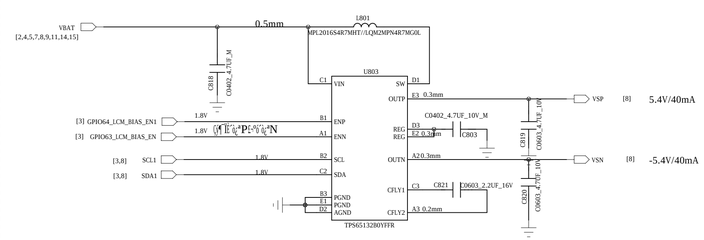

DRAWN: Longbaicheng	DATED: 2019-01-13	COMPANY: TRANSSION	
		TITLE: INF-NOTE4S_MT6737T_Schematic	
CHECKED: <Checked By>	DATED: <Checked Date>	CODE: <Code>	SIZE: D
QUALITY CONTROL: <QC By>	DATED: <QC Date>	DRAWING NO: <Drawing Number>	REV: V1.0
RELEASED: <Released By>	DATED: NA	SCALE: <Scale>	SHEET: 8 OF 17

该文档是极速PDF编辑器生成
如果想去掉该提示,请访问并下载:
http://www.jitupdfeditor.com/

Main CAMERA

8M¼æÈÝ13M

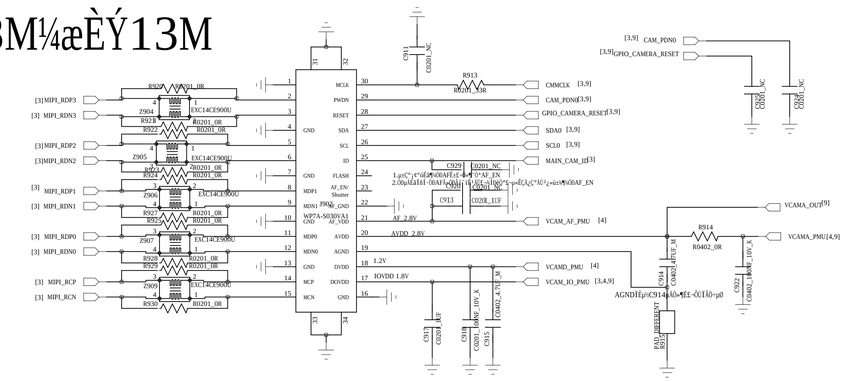

VCAMD(0.9/1.0/1.1/1.22/1.3/1.5) Ã»ÓÐ1.8V

Sub Camera
2M¼æÈÝ5M

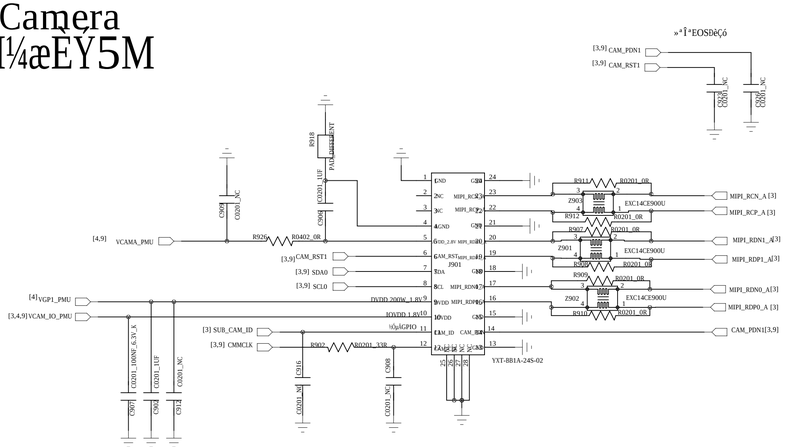

ºóÉãAVDD¼æÈÝ13MÍâÖÃLDO

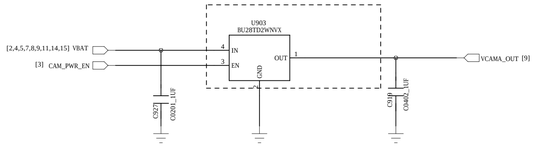

Ç°Éã²¹âµÆ

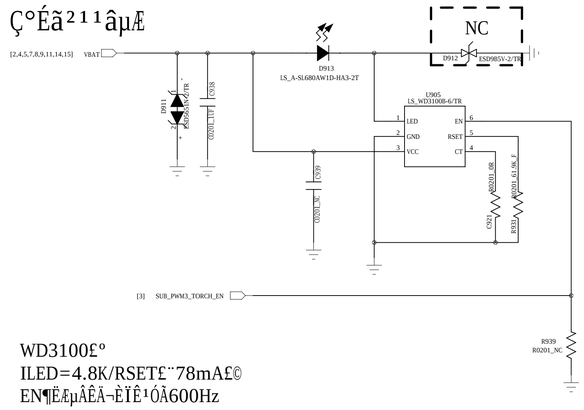

WD3100£º
ILED=4.8K/RSET£¨78mA£©
EN¶ËÆµµÂÊÄ¬ÈÎÊ¹ÓÃ600Hz

Main Flash LED Driver

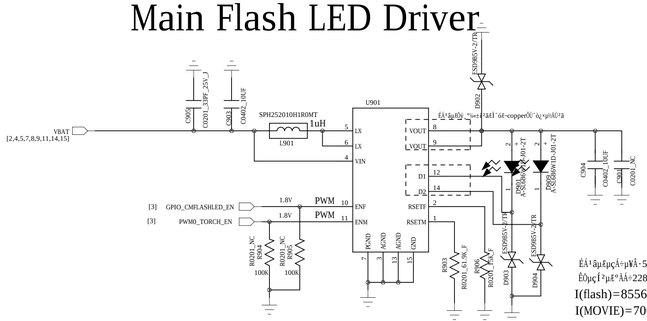

COMPANY: TRANSSION			
TITLE: INF-NOTE4S_MT6737T_Schematic			
DRAWN: Longbaicheng	DATED: 2019-01-13		
CHECKED: <Checked By>	DATED: <Checked Date>		
QUALITY CONTROL: <QC By>	DATED: <QC Date>		
RELEASED: <Released By>	DATED: NA		
CODE: <Code>	SIZE: D	DRAWING NO: <Drawing Number>	REV: V1.0
SCALE: <Scale>		SHEET: 9 OF 17	

该文档是极速PDF编辑器生成
如果想去掉该提示,请访问并下载:
http://www.jitupdfeditor.com/

T_FLASH

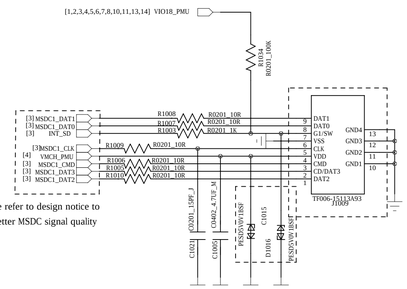

SIM

MICRO SIM1

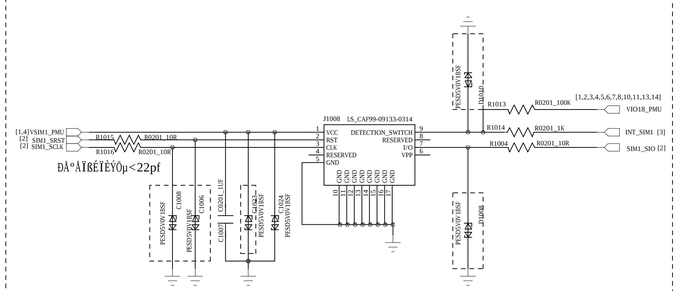

NANO SIM2

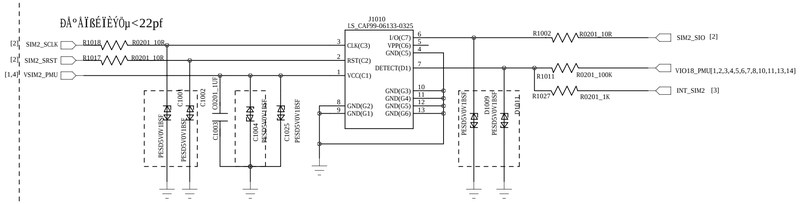

×¢Òâ£ºSIM½Ó¿ÚEOS¶ÔÓÓÚNFCÓÐ·çÏÒ£¡£¡£¡£¡£¡

Schematic design notice of "40_MEMORY_SD Card" page.

Note 40-1:

The total equivalent capacitance of MSDC ESD protection device and de-sense bypass CAP must be <=10pF.
But for NFC app. equivalent capacitance of MSDC_NFC_SWPIO and MSDC_NFC_VCCSWP should <=0.5pF.

KEY

DO NOT put pull-up resistor on PWRKEY

¿"»ú¼ü¾ÙÅä½¸ùÐÅ°ÅÉ¬FPC×ßÍßÉ±ÐÈÓ°ÅÁ·Å½¸ò³ðÅÁ´É¬ÉÈ»°óÓÚPAD´¡Á¬ÓÚÜ»£ð

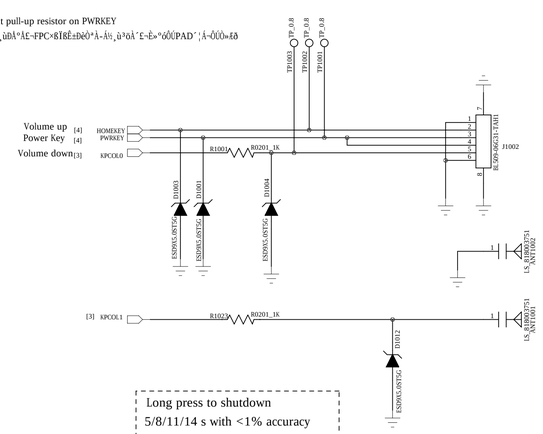

Notice :
FCHR_ENB de-bounce time is
around 50ms, so it may have
quick-press-miss-key issue
(ex: miss key during press key 7 times in 1 sec)
If you have this concern,
please change Volume_Down_Key design from FCHR_ENB to KCOLx

Long press to shutdown
5/8/11/14 s with <1% accuracy
There are 3 option:
PWRKEY+HOMEKEY
PWRKEY only(setting by register)
HOMEKEY only(setting by register)

Re-start
1.Phone will re-power on if keep long press PWRKEY after system shutdown
2.If has SPAR function,Phone will re-power on after system shutdown

During download mode, defalut = PWRKEY + FCHR_ENB
For other case (exclude download mode), defalut = PWERKEY only

Link_FPC

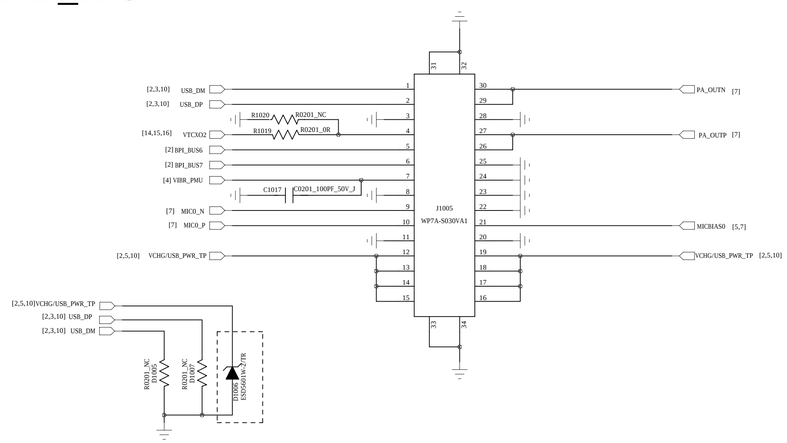

COMPANY: TRANSSION			
TITLE: INF-NOTE4S_MT6737T_Schematic			
DRAWN: Longbaicheng	DATED: 2019-01-13		
CHECKED: <Checked By>	DATED: <Checked Date>	CODE: <Code>	SIZE: D
QUALITY CONTROL: <QC By>	DATED: <QC Date>	DRAWING NO: <Drawing Number>	REV: V1.0
RELEASED: <Released By>	DATED: NA	SCALE: <Scale>	SHEET: 10 OF 17

该文档是极速PDF编辑器生成
如果想去掉该提示,请访问并下载:
http://www.jitupdfeditor.com/

REVISIONS:				
LTR	ECO NO:		APPROVED:	DATE:

ALS&PS

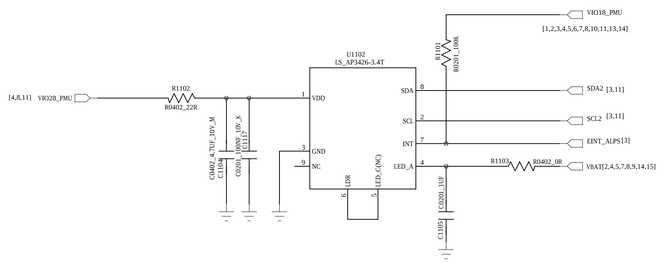

G-sensor

I2C>0.7VDDIO=1.26V

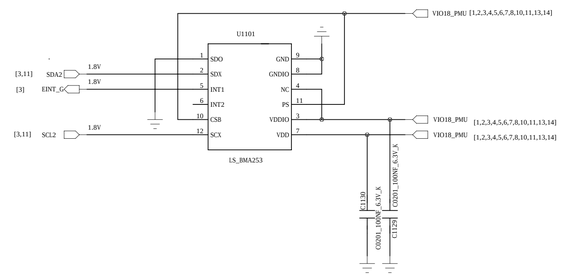

E-compass

CAD=0, AK09911C I2C address 0x0CH (7bit)
AK09916C I2C address 0x0CH (7bit)

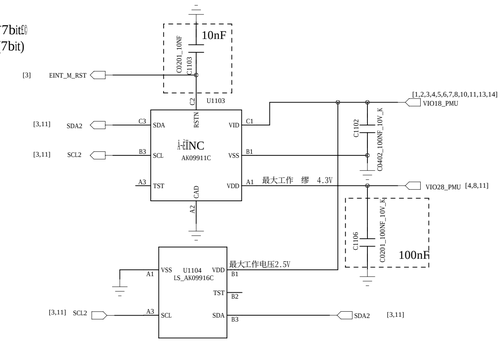

ÆÁ±ÎÕÖAND¶¨Î»¿×

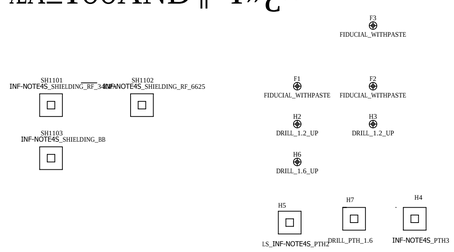

COMPANY: TRANSSION					
TITLE: INF-NOTE4S_MT6737T_Schematic					
DRAWN: Longbaicheng	DATED: 2019-01-13				
CHECKED: <Checked By>	DATED: <Checked Date>	CODE: <Code>	SIZE: D	DRAWING NO: <Drawing Number>	REV: V1.0
QUALITY CONTROL: <QC By>	DATED: <QC Date>				
RELEASED: <Released By>	DATED: NA	SCALE: <Scale>		SHEET: 11 OF 17	

该文档是极速PDF编辑器生成
如果想去掉该提示,请访问并下载:
http://www.jitupdfeditor.com/

GPS/WIFI/BT/FM

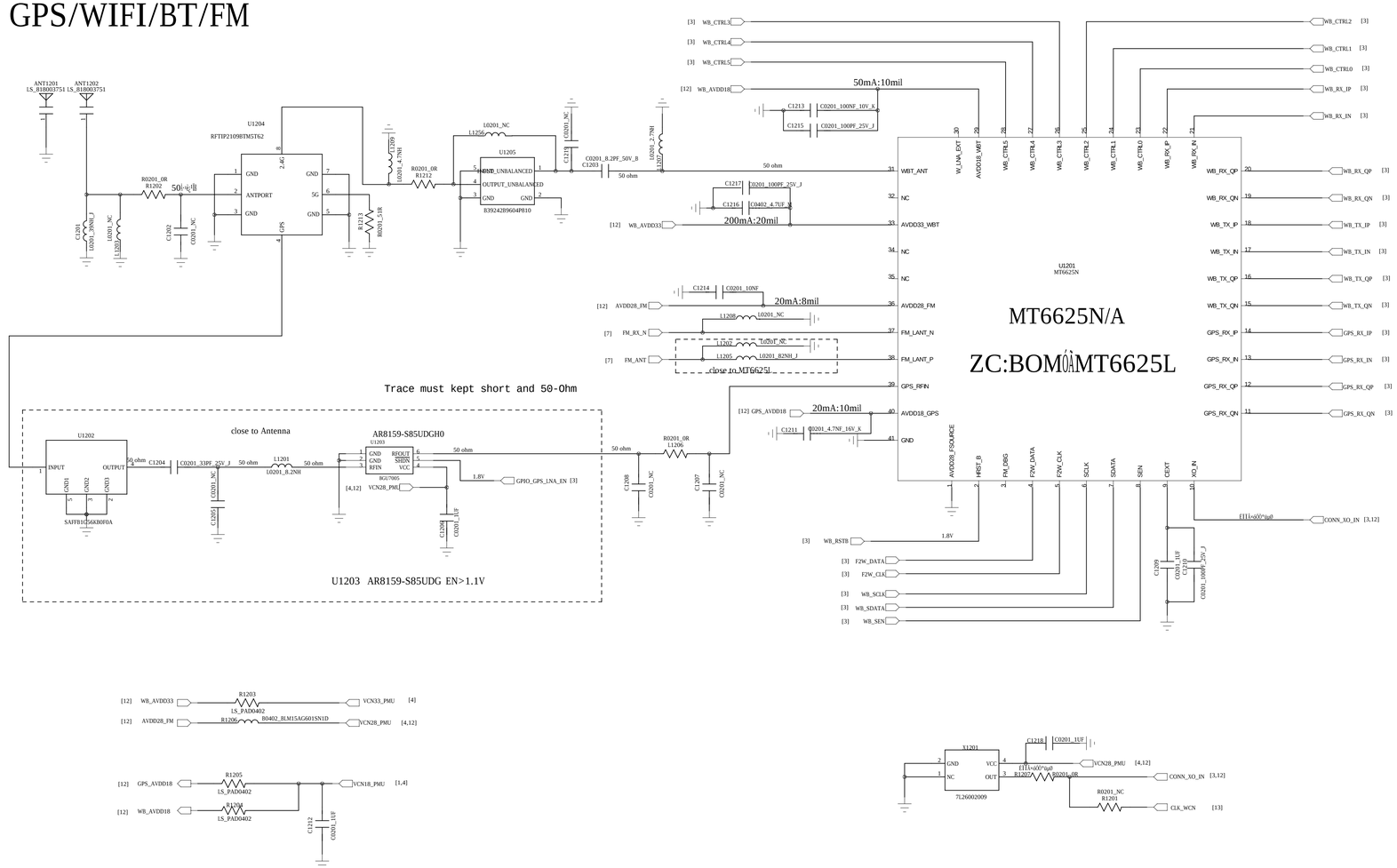

DRAWN: Longbaicheng	DATED: 2019-01-13	COMPANY: TRANSSION	
CHECKED: <Checked By>	DATED: <Checked Date>	TITLE: INF-NOTE4S_MT6737T_Schematic	
QUALITY CONTROL: <QC By>	DATED: <QC Date>	CODE: <Code> / SIZE: D / DRAWING NO: <Drawing Number>	REV: V1.0
RELEASED: <Released By>	DATED: NA	SCALE: <Scale>	SHEET: 12 OF 17

该文档是极速PDF编辑器生成
如果想去掉该提示,请访问并下载:
http://www.jisupdfeditor.com/

MT6169

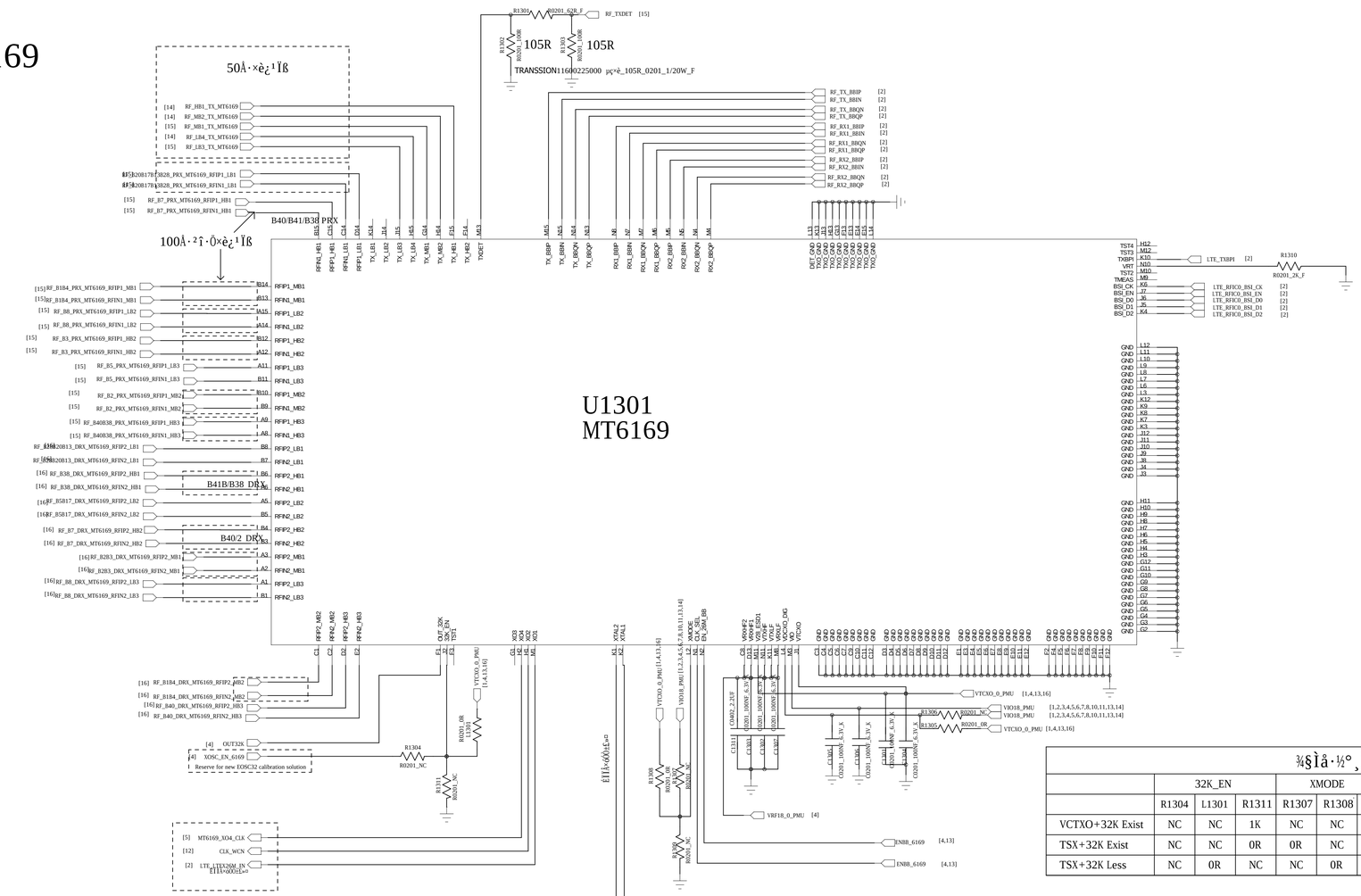

¾§ÌÅ·½°¸ÌùÆ¬ÅäÕÃ±í2/3 (Page4¡¢13¡¢16£©																		
	32K_EN		XMODE			VDCXO_DIG		VCTCXO/TSX Component										
	R1304	L1301	R1311	R1307	R1308	R1309	R1306	R1305	C1308	C1309	C1350	C1351	C1343	C1344	C1345	C1310	C1324	X1302
VCTXO+32K Exist	NC	NC	1K	NC	NC	1K	0R	NC	100nF	NC	0R	0R	NC	NC	NC	100nF	NC	VCTXO
TSX+32K Exist	NC	NC	0R	0R	NC	NC	0R	NC	NC	NC	NC	NC	100K	0R	0R	NC	1uF	TSX
TSX+32K Less	NC	0R	NC	NC	0R	NC	NC	0R	NC	NC	NC	NC	100K	0R	0R	NC	1uF	TSX

Case	MT6169 Control Pin					MT6169 CLK Output			Clock scheme
	XMODE	32K_EN	VDXCO_DIG	EN_26M_BB	CLK_SEL	OUT_32K	XO1	XO2~4	
1	0	0	VIO18	0	0	Off	Off	Off	VCTXO 32K XO
2	0	0		1	1	Off	26M Out	26M Out	
3	VIO18	0		0	0	Off	Off	Off	26M XO 32K XO
4		0		1	1	Off	26M Out	26M Out	
5	VTCXO28	XOSC_EN_6169	VTCXO28	0	0	On	Off(LPM)	Off	26M XO
6				1	1	On	26M Out	26M Out	32K Less

1.Route AUXADC_REF_RF/THERM_SENSE with 4mil trace width
2.Route AUXADC_REF_RF/THERM_SENSE as differential trace with well GND shielding
3.Route AUXADC_GND with 24mil trace width under THERM_SENSE/AUXADC_REF trace to provide return current path.

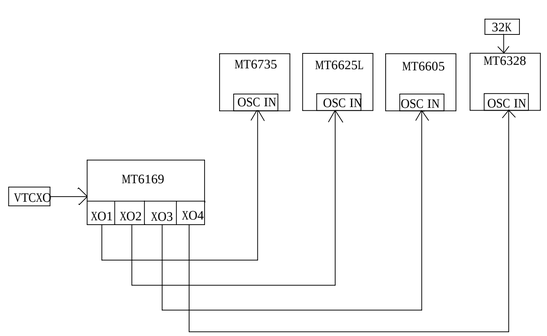

COMPANY: TRANSSION			
TITLE: INF-NOTE4S_MT6737T_Schematic			
DRAWN: Longbaicheng	DATED: 2019-01-13		
CHECKED: <Checked By>	DATED: <Checked Date>		
QUALITY CONTROL: <QC By>	DATED: <QC Date>		
RELEASED: <Released By>	DATED: NA		
CODE: <Code>	SIZE: D	DRAWING NO: <Drawing Number>	REV: V1.0
SCALE: <Scale>		SHEET: 13 OF 17	

该文档是极速PDF编辑器生成
如果想去掉该提示,请访问并下载:
http://www.jisupdfeditor.com/

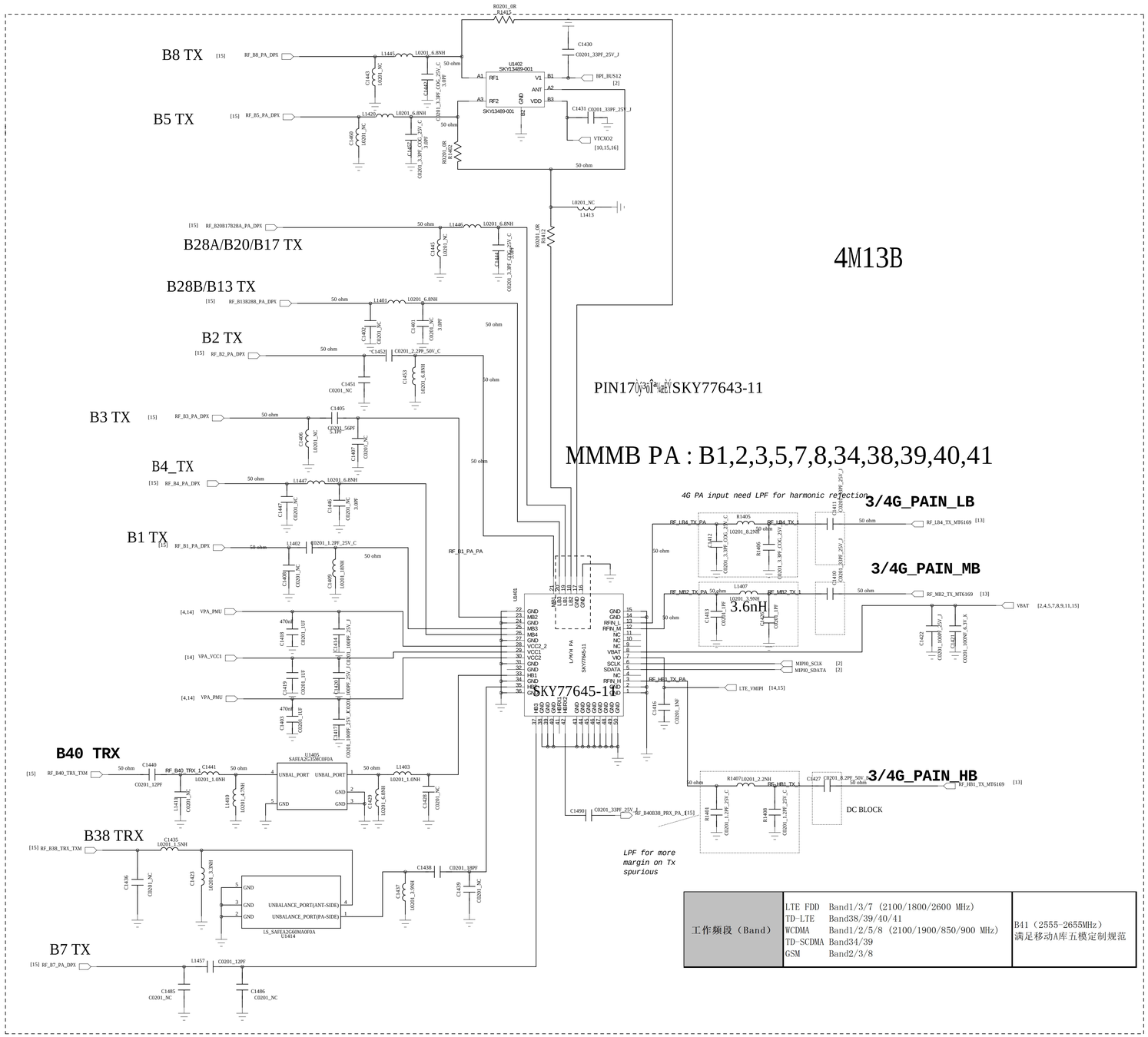

工作频段（Band）	LTE FDD Band1/3/7 (2100/1800/2600 MHz) TD-LTE Band38/39/40/41 WCDMA Band1/2/5/8 (2100/1900/850/900 MHz) TD-SCDMA Band34/39 GSM Band2/3/8	B41（2555-2655MHz） 满足移动A库五模定制规范

VPA_VCC1 and VPA PMU need to be connected after Cap

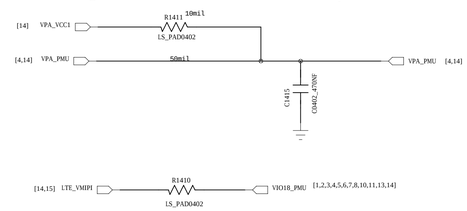

Thermistor / To sense board level temperature

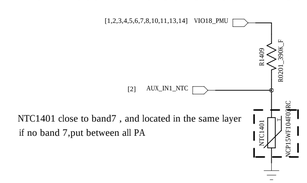

NTC1401 close to band7 , and located in the same layer if no band 7,put between all PA

COMPANY: TRANSSION			
TITLE: INF-NOTE4S_MT6737T_Schematic			
DRAWN: Longbaicheng	DATED: 2019-01-13		
CHECKED: <Checked By>	DATED: <Checked Date>		
QUALITY CONTROL: <QC By>	DATED: <QC Date>		
RELEASED: <Released By>	DATED: NA		
CODE: <Code>	SIZE: D	DRAWING NO: <Drawing Number>	REV: V1.0
SCALE: <Scale>		SHEET: 14 OF 17	

该文档是极速PDF编辑器生成,
如果想去掉该提示,请访问并下载:
http://www.jisupdfeditor.com/

REVISION RECORD			
Date:	CO NO:	APPROVED:	DATE:

ASM_Main

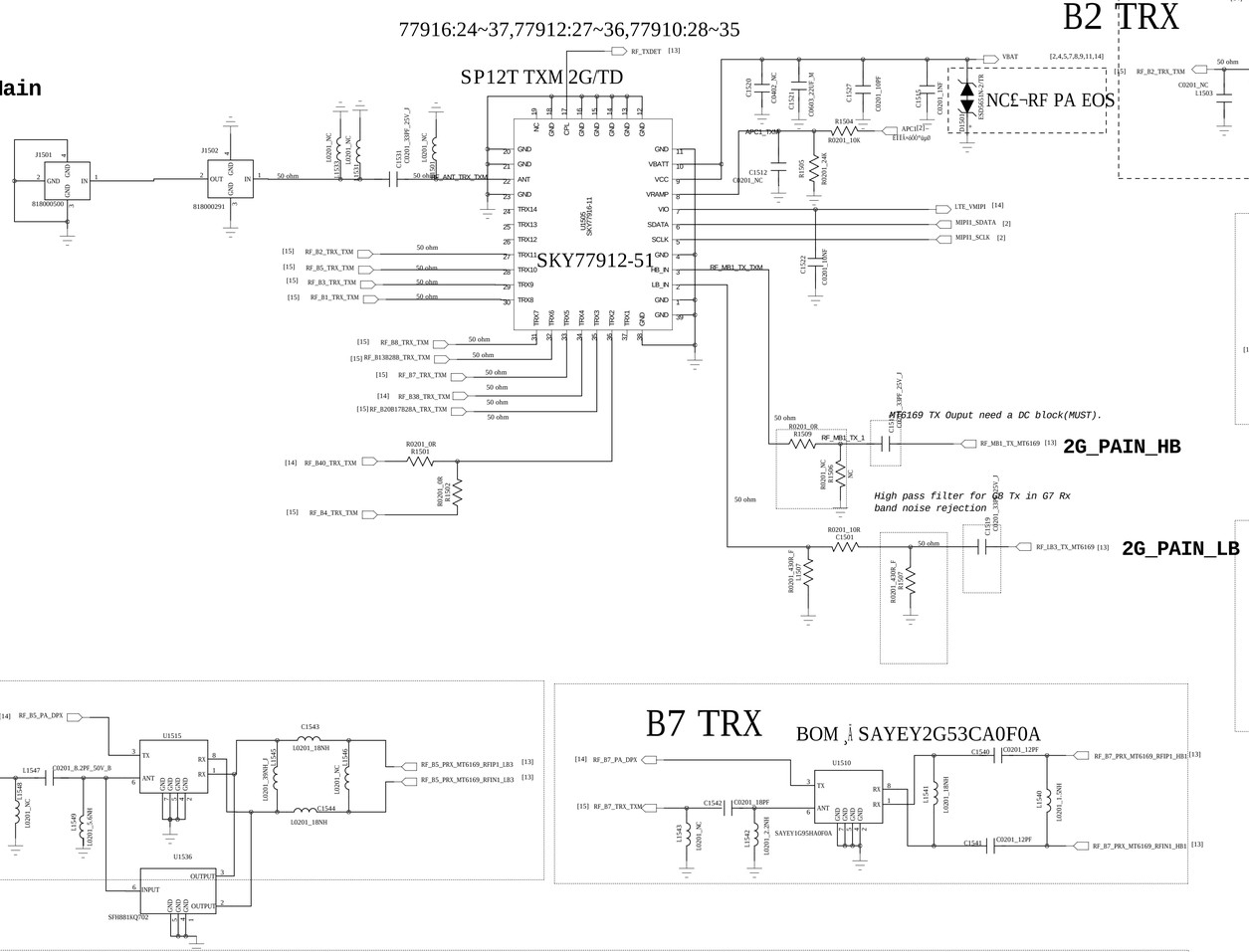

B2 TRX

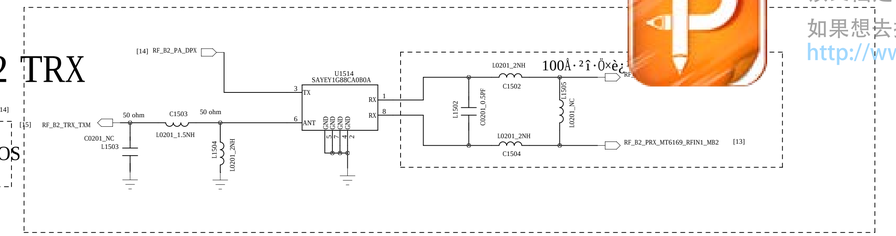

B8 TRX(Áª Í¨ÅäÖÃ)

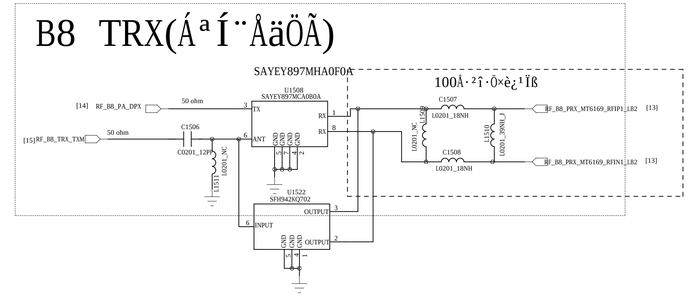

B3 TRX

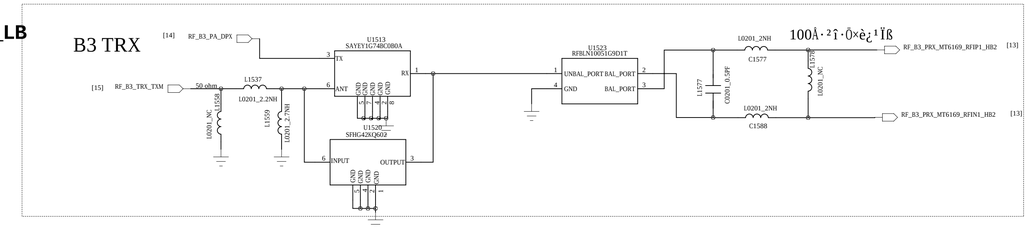

B5 TRX

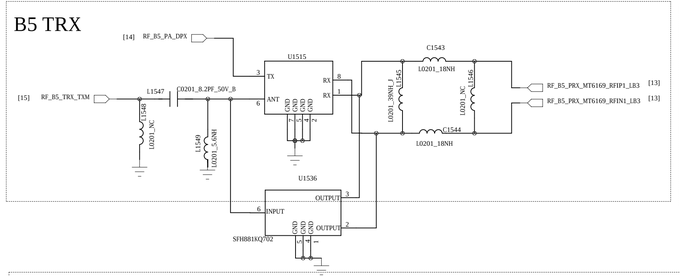

B7 TRX

BOM ¡¡ SAYEY2G53CA0F0A

B40/B38 PRX

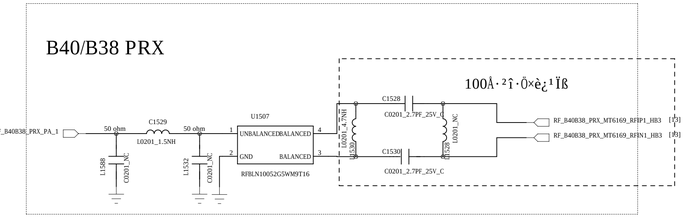

B1 TRX

B4 TRX

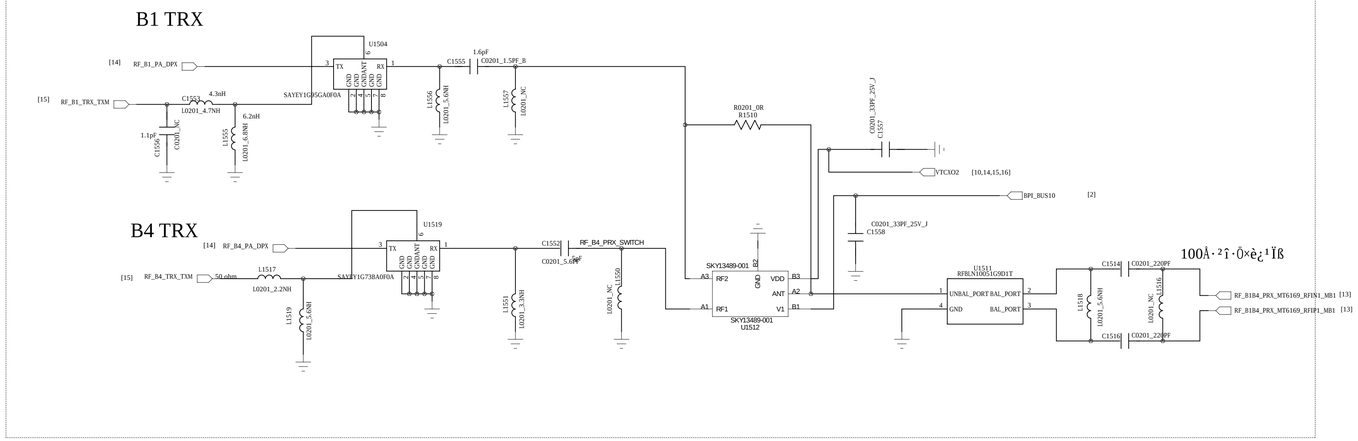

COMPANY: TRANSSION					
TITLE: INF-NOTE4S_MT6737T_Schematic					
DRAWN: Longbaicheng	DATED: 2019-01-13				
CHECKED: <Checked By>	DATED: <Checked Date>	CODE: <Code>	SIZE: D	DRAWING NO: <Drawing Number>	REV: V1.0
QUALITY CONTROL: <QC By>	DATED: <QC Date>				
RELEASED: <Released By>	DATED: NA	SCALE: <Scale>		SHEET: 15 OF 17	

该文档是极速PDF编辑器生成
如果想去掉该提示,请访问并下载:
http://www.jitupdfeditor.com/

LTR	ECO NO:	APPROVED:	DATE:

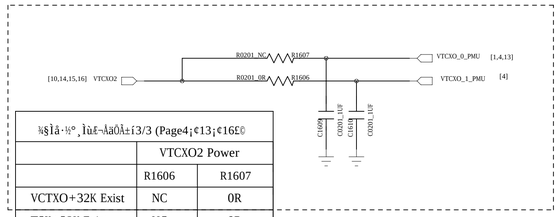

¾§Ìå·½° ¸Ìµ£¬ÅäÖÃ±í3/3 (Page4¡¢13¡¢16£©		
	VTCXO2 Power	
	R1606	R1607
VCTXO+32K Exist	NC	0R
TSX+32K Exist	NC	0R
TSX+32K Less	0R	NC

DRX ANT: 1805-2655MHz

DRX Car Kit

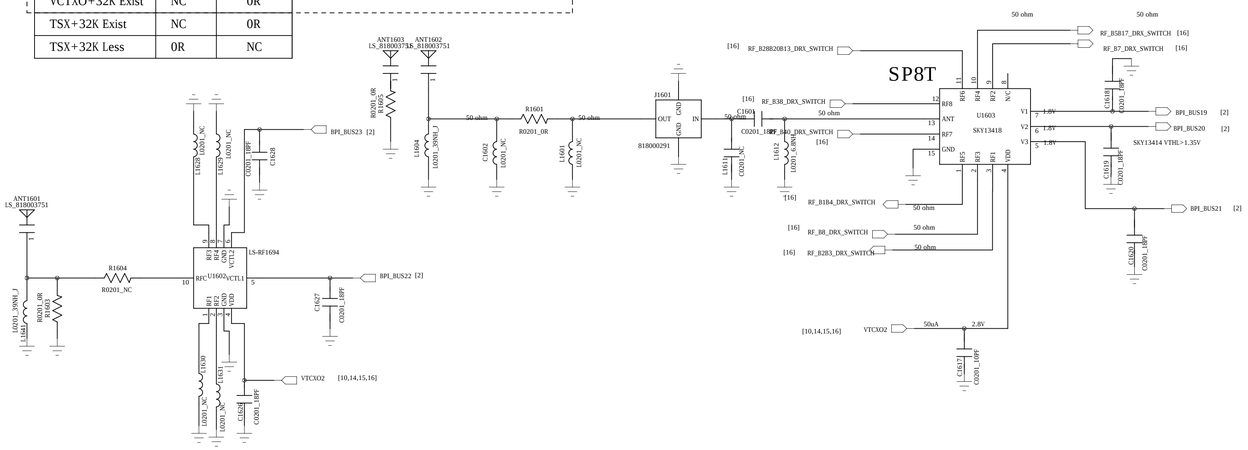

B1/4

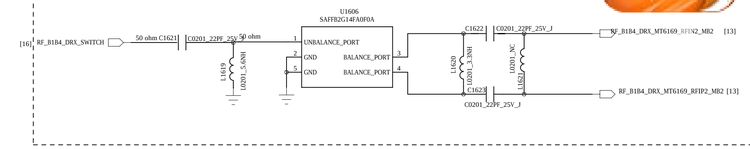

B5/B17 B17Ê¹ÓÃSAFFB740MFA0F0A

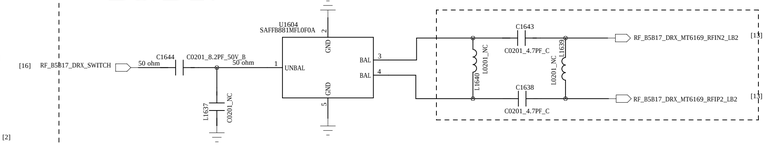

B8 DRX

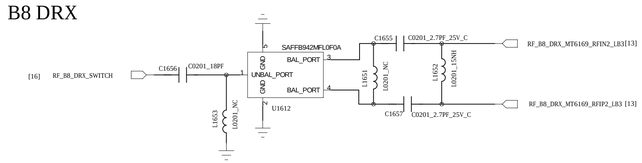

B2/B3 DRX B2Ê¹ÓÃSAFFB1G96FA0F0A

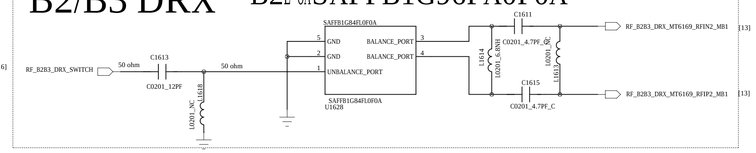

B38 DRX

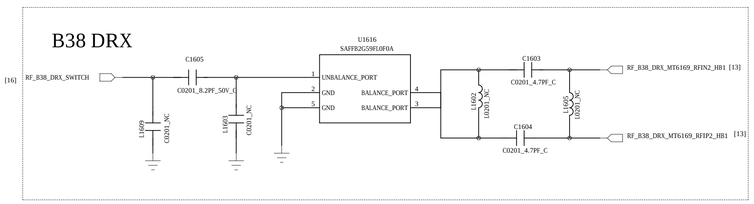

B40 DRX

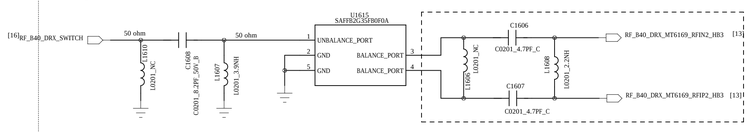

B28/B20/B13 DRX

B20Ê¹ÓÃSAFFB806MAA0F0A

B13Ê¹ÓÃSAFFB751MAA0F0A

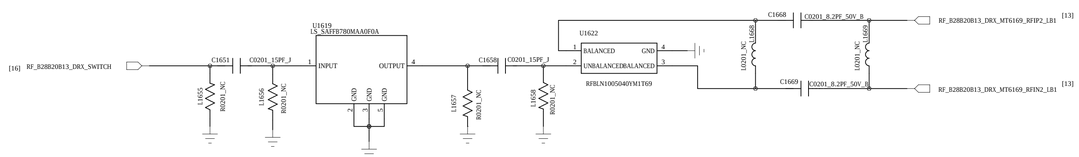

B7 DRX

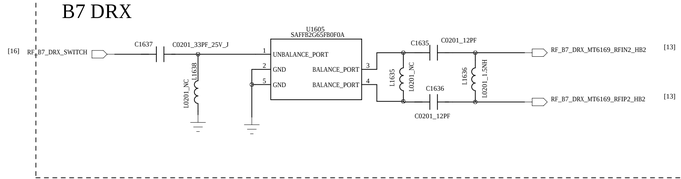

COMPANY: TRANSSION			
TITLE: INF-NOTE4S_MT6737T_Schematic			
DRAWN: Longbaicheng	DATED: 2019-01-13		
CHECKED: <Checked By>	DATED: <Checked Date>	CODE: <Code>	SIZE: D
QUALITY CONTROL: <QC By>	DATED: <QC Date>	DRAWING NO: <Drawing Number>	REV: V1.0
RELEASED: <Released By>	DATED: NA	SCALE: <Scale>	SHEET: 16 OF 17

该文档是极速PDF编辑器生成
如果想去掉该提示,请访问并下载:
http://www.jitupdfeditor.com/

Project : MT6735 REF_SCH TOP LEVEL

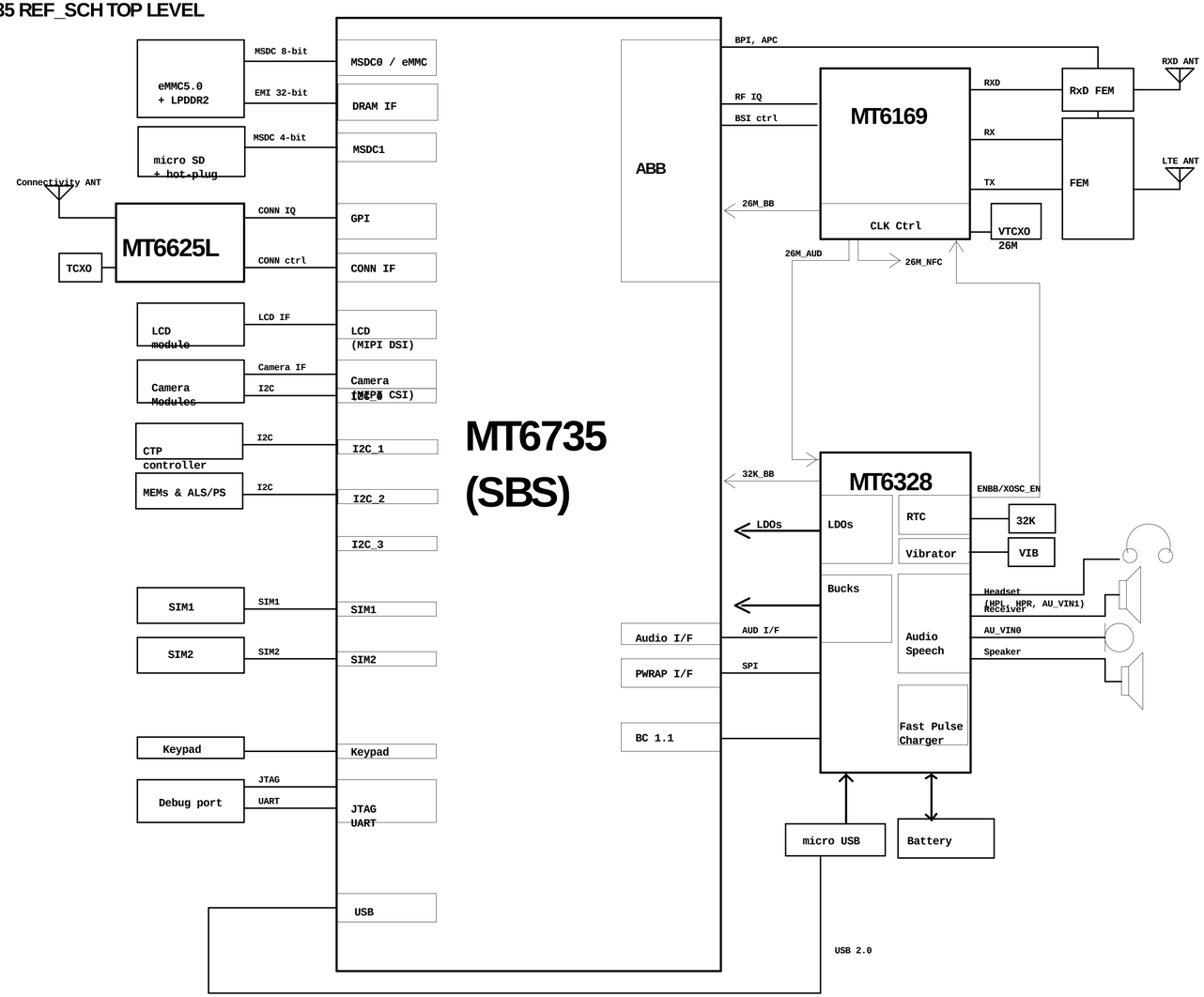

DRAWN: Longbaicheng	DATED: 2019-01-13	COMPANY: TRANSSION		
CHECKED: <Checked By>	DATED: <Checked Date>	TITLE: INF-NOTE4S_MT6737T_Schematic		
QUALITY CONTROL: <QC By>	DATED: <QC Date>	CODE: <Code>	SIZE: D	DRAWING NO: / REV: V1.0
RELEASED: <Released By>	DATED: NA	SCALE: <Scale>		SHEET: 17 OF